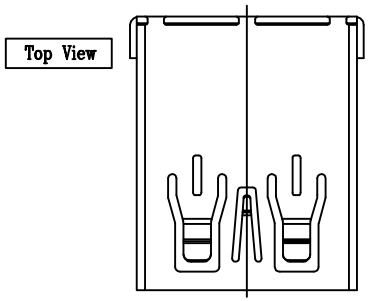

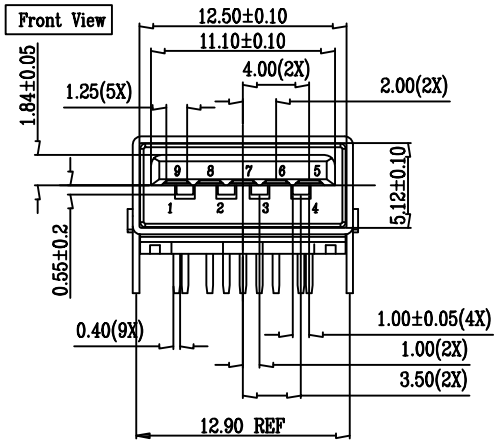

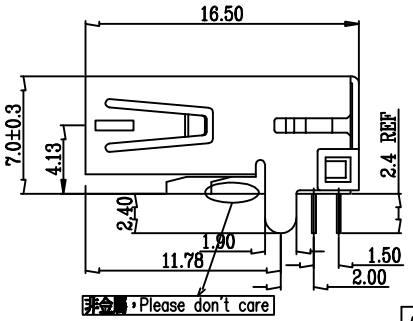

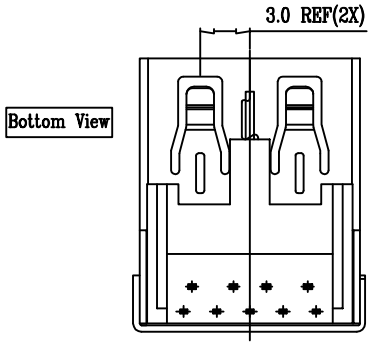

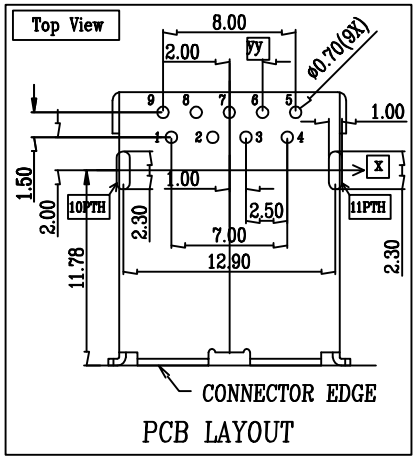

Note:

Specification:

1. Rated voltage and current: 1A Max.
2. Dielectric withstanding voltage: 30V(ac) for 1 minute.
3. Contact resistance:Before life test 30m ohm Max.
   After life test 50m ohm max
4. Insulation resistance: 100M ohm Min at DC 250V.
5. Insertion force: 35 Newtons Max.
6. Extraction force: 10 Newtons Min.
7. Solderability:Terminal shall be immersed in flux before text,
   Then dip in molten solder for 5±0.5 sec. At 260±5°C
8. Temperature range:-55°C~+85°C

PART NO.

20003-TN 0X MX X A

01:铜壳
02: KU-570壳
M2: 半金雾锡FLASH
M3: 半金雾锡10U"
M4: 半金雾锡15U"
M5: 半金雾锡30"
A: 吸塑盒装
2: 黑色
C: 蓝色

No.	Name	Q'ty	Material	Remarks & Thickness	Finish
5	Shell	1	Brass/Steel	T=0.40mm	80u"min Nickel Plated
4	Contact 2	5	Brass	T=0.20mm	Contact area:0.8/10/30u" Gold Plated over 40u"Nickel min. Solder area:80u"min Tin Plated over 40u" Nickel min.(or All Gold Plated)
3	Contact 1	4	Phosphor bronze	T=0.20mm	Contact area:0.8/10/30u" Gold Plated over 40u"Nickel min. Solder area:80u"min Tin Plated over 40u" Nickel min.(or All Gold Plated)
2	Hood	1	high temperature thermal plastic	UL 94-V0	Blue/Black
1	Housing	1	high temperature thermal plastic	UL 94-V0	Blue/Black

尚益科技 Jmsconn 尚益科技有限公司 JMSCONN TECHNOLOGY CO.LTD.

PROJ	SCALE : F DO NOT SCALE DWG		MOLD NO 20003-TN		
APP			MODEL	FILE NO	REV. X1
CHK					
DGN			UNIT MM	SHT 1 OF 1	SIZE A4
DRW	HSIEH	2016.11.16			